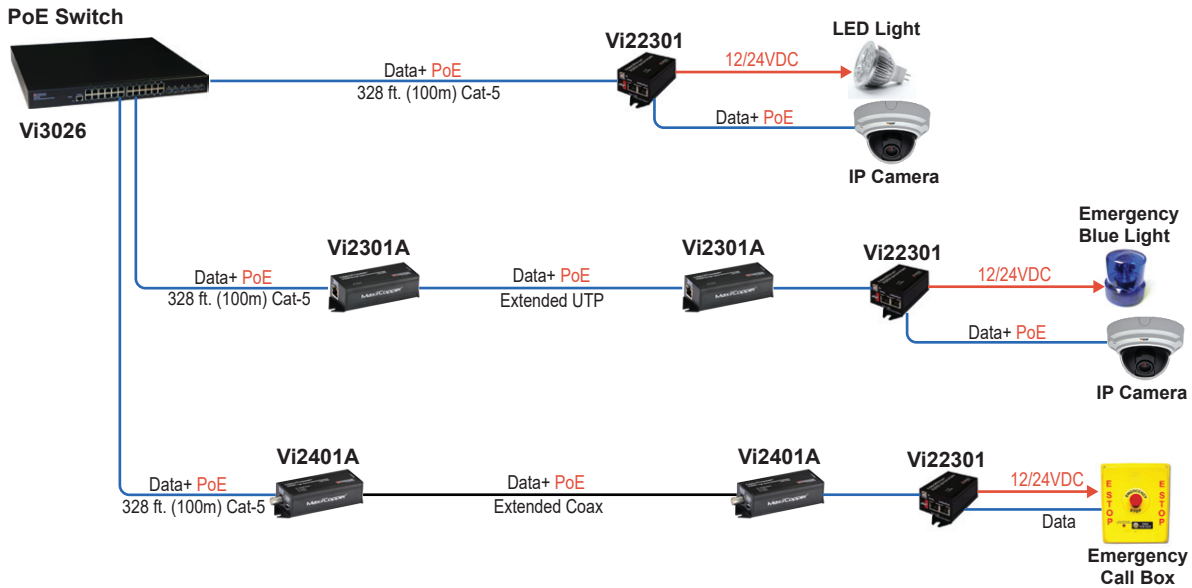
PoE Switch
Vi3026
Data+ PoE
328 ft. (100m) Cat-5
Vi22301
12/24VDC
LED Light
Data+ PoE
IP Camera
Data+ PoE
328 ft. (100m) Cat-5
Vi2301A
Data+ PoE
Extended UTP
Vi2301A
Vi22301
12/24VDC
Emergency
Blue Light
Data+ PoE
IP Camera
Data+ PoE
328 ft. (100m) Cat-5
Vi2401A
Data+ PoE
Extended Coax
Vi2401A
Vi22301
12/24VDC
Data
Emergency
Call Box

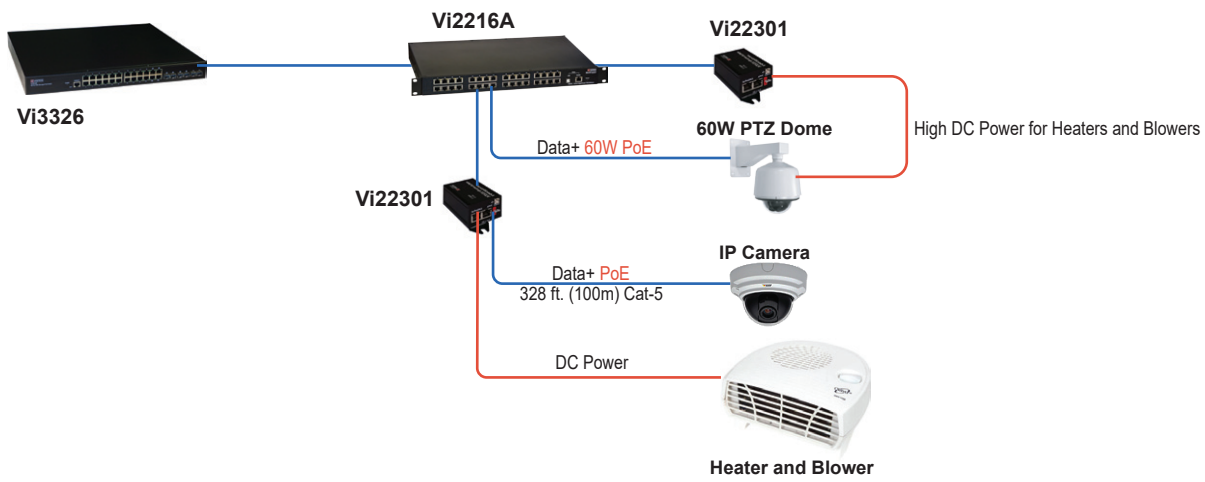
Vi3326
Vi2216A
Vi22301
60W PTZ Dome
High DC Power for Heaters and Blowers
Data+ 60W PoE
Vi22301
IP Camera
Data+ PoE
328 ft. (100m) Cat-5
DC Power
Heater and Blower